HEC-2000-E-R SERIES

Harsh Environment Controllers

- Eight Digital Inputs / Eight Digital Outputs
- SAE J1939 Connectivity
- Easy Mounting to Machine
- Quick Disconnect Field Connections
- Sealed from Environment
- No Secondary Enclosure Required
- Two High Speed Counters
- High Current Outputs with PWM
- Programs using EZ LADDER Toolkit Software
- Visual Status Indicator (Watchdog LED)
- Output Monitoring for Overloaded / Open Circuit

HEC-2000-E-R Programmable Logic Controller

HEC-2000 Series Controllers allow for programmable intelligence under less than ideal conditions. Features include a sealed, water-tight enclosure, high speed counting, and CAN network communication with J1939. Based on patented PLC on a Chip® technology, the controllers are easy to apply and program using the EZ LADDER® Toolkit PC based software. These Harsh Environment Controllers are suitable for direct mounting on machines and are an ideal choice for mobile applications.

Typical Applications Include:

- Mobile Equipment
- Material Handling
- Off Road Equipment
- Agricultural Equipment
- Remote Locations Monitoring & Control
- Engine Driven Pumps, Compressors and Generators

HEC-2000 Series Controller Specifications	
Processor / Memory / Programming	**HEC-2000**
Processor / Memory / EEPROM	M-Series PLC on a Chip, 12K RAM, 256K Flash, 2792 Bytes EEPROM
Programming	Ladder Diagram / Function Block
Digital I/O	
Digital Inputs, 8-32VDC	Qty 8, Sinking
High Speed Counter[1]	Qty 2, Sinking, 40KHz Max., Count Up
Digital Outputs, 8-32VDC, PWM or On/Off	Qty 8, Sourcing, 4 Amp Maximum (per output pair), PWM Frequency 1.436Hz to 1KHz, PWM Range 5-95%, Over-current protected. Output Voltage = Input Voltage.
Indicator LEDs	1 Programmable, 1 Watchdog
Communications	
Serial Ports	1 RS232 / RS485 / RS422 Configurable Serial Port via M8 4 Pin (HEC-2004 only) 1 Programming via Deutsch 'A' Connector
Networking	1 CAN Port, SAE J1939 (Read Only), OptiCAN, Modbus Slave (HEC-2004 only)
Other	
Input Power	8-32VDC
Style / Mounting	Sealed Enclosure / Panel Mount
Connections	2 Deutsch DTM Series (coded A,B) M8 Cable (4 pin) - HEC-2004 only
Dimensions	4.63" x 5.24" x 1.44"
Operating Temperature	-40°C to +80°C with Output Derating based on Temperature (HEC-2000) -25°C to +80°C with Output Derating based on Temperature (HEC-2004)
RoHS	RoHS Compliant

1. Counter Inputs are included in the quantity of digital inputs. Counter inputs may be used as counter or standard digital input.

2008002.2

The HEC-2000-E-R User Manual and EZ LADDER Toolkit can be downloaded from http://www.divelbiss.com.

Ordering Information: (see Specifications for complete list of features per model)

Model #	Description
HEC-2000-E-R	Harsh Environment Controller with 8 DC inputs (2 configurable for High Speed Counter), 8 DC/PWM outputs, 1 CAN Network port for Optican or SAE J1939 connectivity.
HEC-2004-E-R	All HEC-2000-E-R options plus additional configurable RS232/RS422/RS485 COM Port via M8 cable.

Optional Hardware Add-ons/Accessories:

Model #	Description
HEC-10 (Includes:)	"A" Keyed Connector Kit 1 DTM06-12SA 12 1062-20-0122 (16-20 AWG crimp sockets) 1 Wedge Lock
HEC-20 (Includes:)	"B" Keyed Connector Kit 1 DTM06-12SB 12 1062-20-0122 (16-20 AWG crimp sockets) 1 Wedge Lock
HEC-CRMPTL	Crimp Tool for HEC-10/20 Pins (DTT-20-0)
HEC-100	"A" Keyed (Gray) Cable assembly with 6ft. flying leads
HEC-110	"B" Keyed (Black) Cable assembly with 6ft. flying leads
HEC-910	Programming Breakout Cable, 9 pin D-sub connector for RS232/Null Modem Connection
126-102860	RS232 Null Modem Programming Cable
EZLDCD-01	EZ LADDER Toolkit Development Software on USB Flash Drive

Dimensions

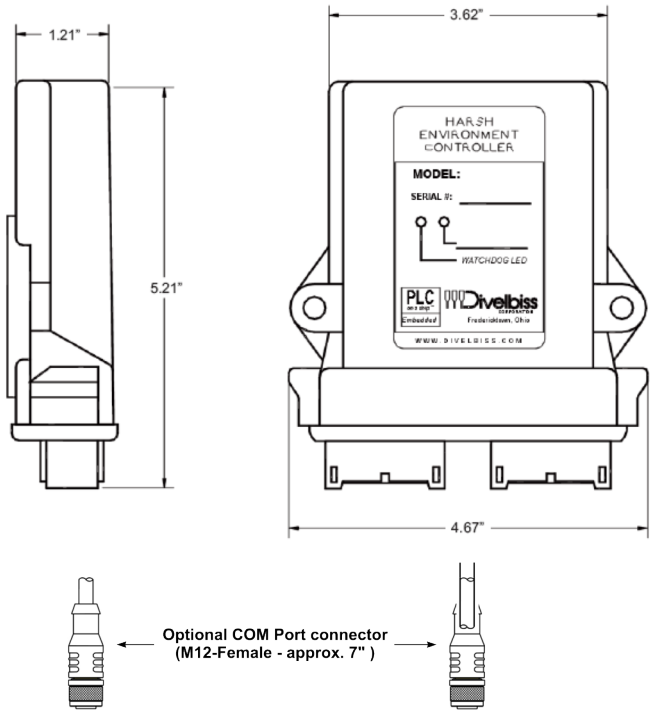

Programming the Controller

The Harsh Environment Controller PLCs program in Ladder Diagram using the Divelbiss EZ LADDER® Toolkit, a Ladder Diagram Development Platform. EZ LADDER software parallels the IEC-61131 standard and provides an easy to use interface.

After a ladder diagram program is developed, it can be downloaded to the HEC controller via the programming port (on the "A" connector). The program is stored on non-volatile FLASH memory and is automatically executed on power up. Once the download is complete, the HEC is successfully programmed and begins executing the program.

Refer to the EZ LADDER Toolkit's User Manual for more detail on creating ladder diagram programs, connecting to targets and downloading the program to targets. The manual can be downloaded from our website: http://www.divelbiss.com.

Specifications are subject to change without notice.