USER'S MANUAL

Revision: 0

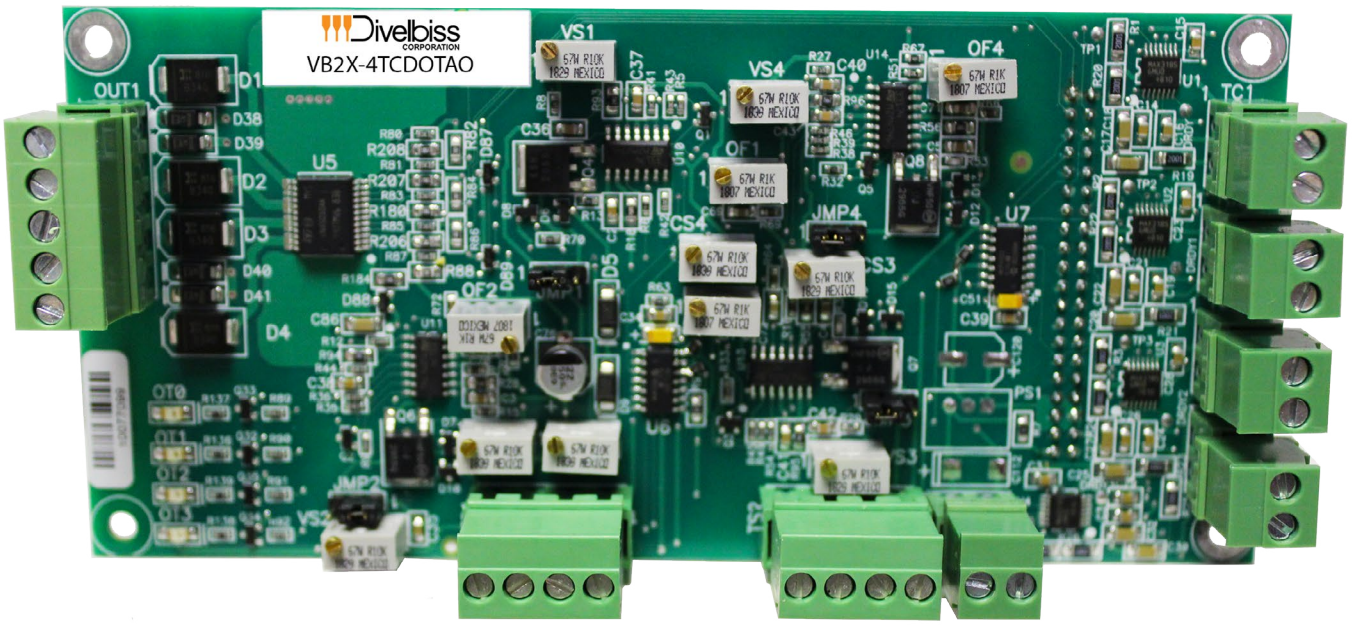

VB2X 4 Thermocouple, Digital Output & Analog Expansion Board

Covered Models: **VB2X-4TCDOTAO**

Divelbiss CORPORATION

Divelbiss Corporation
9778 Mt. Gilead Road,
Fredericktown, Ohio 43019

Toll Free: 1-800-245-2327
Web: http://www.divelbiss.com
Email: sales@divelbiss.com

2019001.0

Manual Contents

Getting Started

VB2X-4TCDOTAO Features

WARNING!!

The VB-2XXX with the VB2X-4TCDOTAO installed, as with other programmable controllers must not be used alone in applications which could be hazardous to personnel in the event of failure of this device. Precautions must be taken by the user to provide mechanical and/or electrical safeguards external to this device. This device is NOT APPROVED for domestic or human medical use.

Divelbiss Corporation • 9778 Mt. Gilead Road • Fredericktown, Ohio 43019 • 1-800-245-2327 • www.divelbiss.com

Getting Started

This section explains how to read this manual and understand the symbols and information that it contains.

To begin using your VB2X-4TCDOTAO Expander, you will need to follow these steps:

- Install the VB2X-4TCDOTAO on the VB-2XXX Controller
- Configure the VB-2XXX Controller to use the VB2X-4TCDOTAO in the EZ LADDER Toolkit Project Settings.

Refer to the appropriate sections of this manual for details on the above items.

How to Use this Manual

In this manual, the following conventions are used to distinguish elements of text:

BOLD	Denotes labeling, commands, and literal portions of syntax that must appear exactly as shown.
italic	Used for variables and placeholders that represent the type of text to be entered by the user.
SMALL CAPS	Used to show key sequences or actual buttons, such as OK, where the user clicks the OK button.

In addition, the following symbols appear periodically in the left margin to call the readers attention to specific details in the text:

Warns the reader of a potential danger or hazard associated with certain actions.

Appears when the text contains a tip that is especially useful.

Indicates the text contains information to which the reader should pay particularly close attention.

All Specifications and Information Subject to Change without Notice

Install the VB2X-4TCDOTAO Expander on the VB-2XXX Controller

The VB-2XXX and VB2X-4TCDOTAO are purchased separately. Before the VB2X-4TCDOTAO may be used, it must be installed as the expansion option on the VB-2XXX controller. You will need full access to the VB-2XXX top and bottom. It is recommended to disconnect and un-mount the VB-2XXX prior to beginning this installation.

To Install the VB2X-4TCDOTAO

1. Un-mount and disconnect the VB-2XXX Controller

2. Using the 4 metal spacers and 4 of the screws provided, install the spacers on the VB-2XXX controller in the provided expansion holes as shown in Figure 1-1. The male side (threaded post) of the spacer will go through the VB-2XXX board from the top to bottom. Install 4 Lock washer and 4 nuts to the spacers (on the back side).

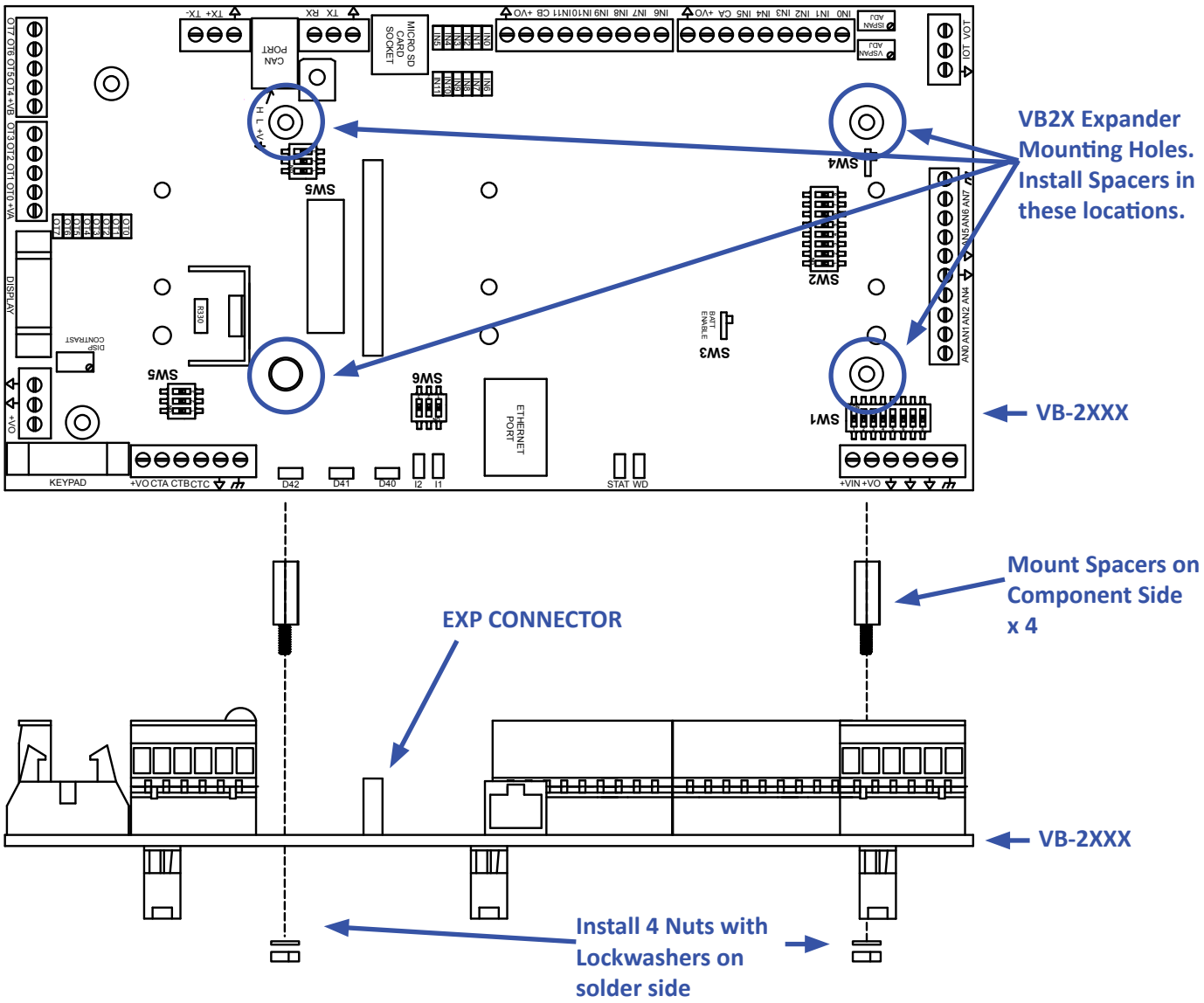

Figure 1-1 - Installation of Spacers

3. Carefully aligning the VB2X-4TCDOTAO with the installed spacers, gently plug the VB2X-4TCDOTAO into the EXP connector on the VB-2XXX. Ensure proper alignment on EXP. When installed correctly, all the VB2X-4TCDOTAO pins will be plugged into the EXP connector and the VB2X-4TCDOTAO will be placed against the spacers and the mounting holes will align with the spacers correctly. Refer to Figure 1-2.

4. Install the remaining 4 screws and lockwashers provided to secure the VB2X-4TCDOTAO to the VB-2XXX controller (installed spacers).

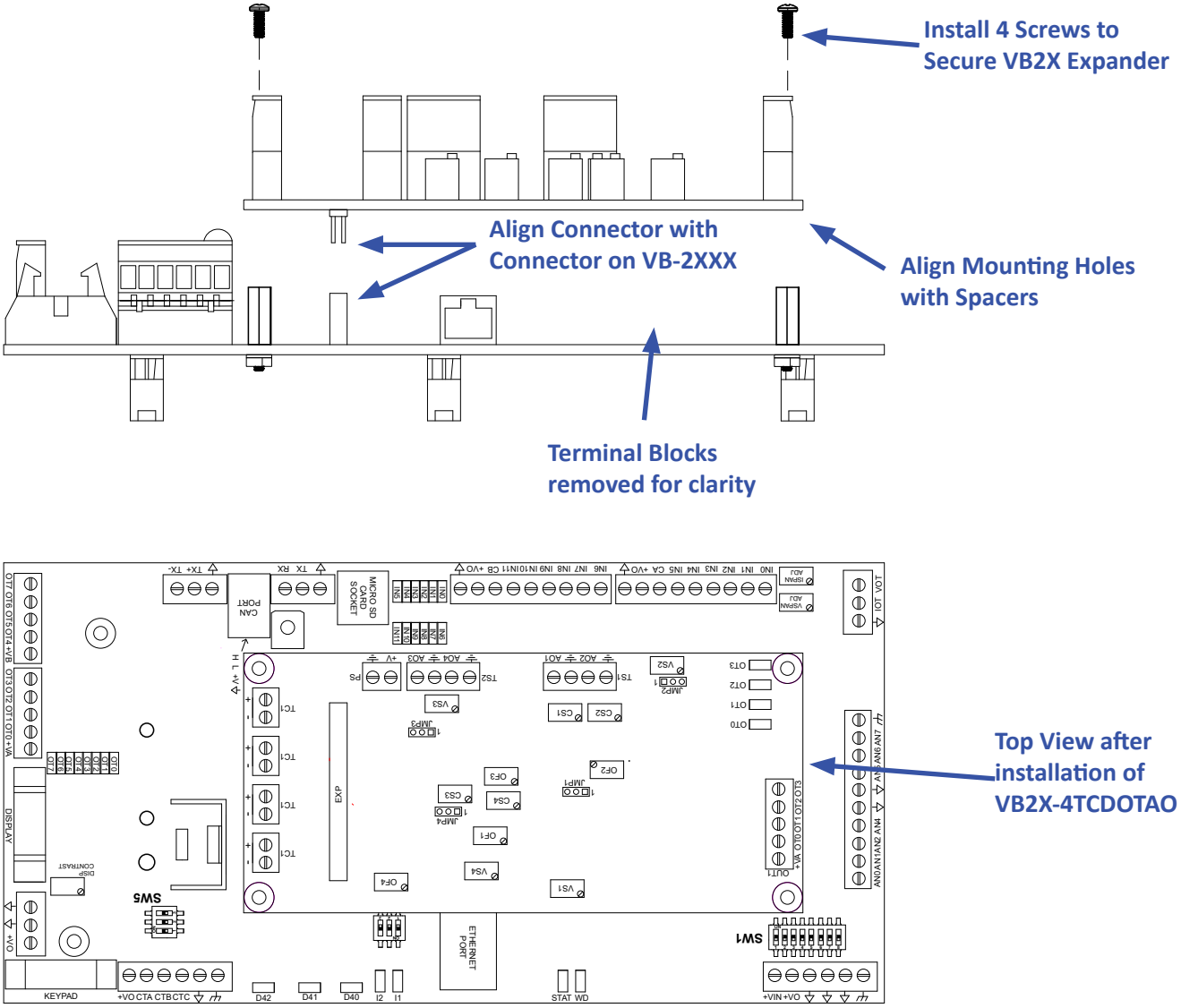

Figure 1-2 - Mounting the VB2X-4TCDOTAO

Configuring the VB2X-4TCDOTAO in EZ LADDER Toolkit

It is assumed that you are familiar with the VB-2XXX before installing this expansion option. Please refer to the VB-2XXX User Manual for details regarding the VB-2XXX.

Before you can begin using features on the VB2X-4TCDOTAO, it must be configured as an option for the VB-2XXX target within the EZ LADDER Toolkit. For help with installing or using EZ LADDER, please refer to the P-Series EZ LADDER Toolkit Manual.

1. In EZ LADDER, from the File Menu at the top, click **PROJECT** then **SETTINGS**. This will open the Project Settings Window. Select **VB-2000** as the target from the choices. Refer to Figure 1-3.

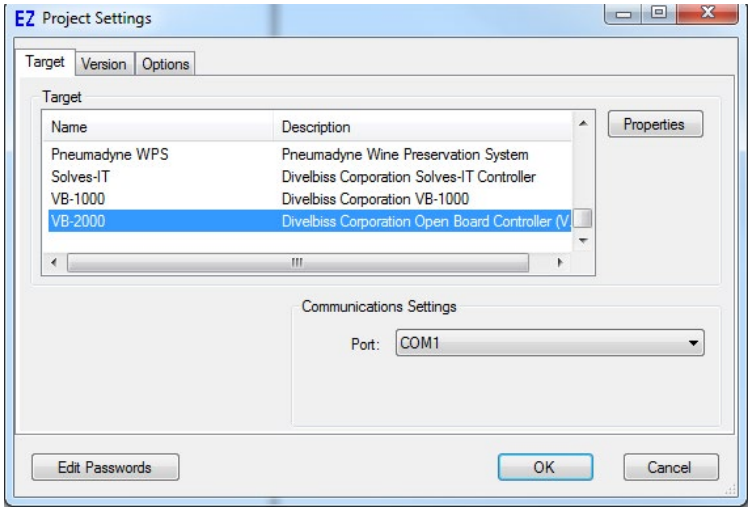

Figure 1-3 - Project Settings Window

2. Click the **PROPERTIES** button to the right side of the window. The VB-2000 Properties Window will open. Make sure the proper model is selected in the drop-down menu. If any expansion board was installed previously, it would be listed in the **Expansion Pane**.

3. Highlight the ***I/O Expansion*** in the list and click the **PROPERTIES** button on the right side of the Expansion pane in the VB-2000 Properties Window. The I/O Expansion Properties Window will open. Refer to Figure 1-4.

4. Select the VB2X-4TCDOTAO expansion board from the list of Expansion boards. Refer to Figure 1-4. The Details section of the window will update with the devices supported on the expander (for reference only) that will be installed in the project settings of the program.

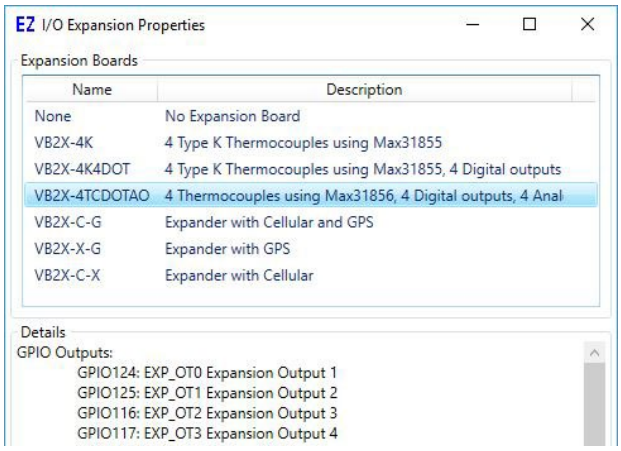

Figure 1-4 - I/O Expansion Properties

5. Click **OK** to accept the VB2X-4TCDOTAO and close the I/O Expansion Properties Window.

6. Click **OK** to close the *VB-2000 Properties* window. Click **OK** to close the Project Settings window.

7. Save your ladder diagram using the menu **FILE** and **SAVE** or **SAVE AS** to save the current settings in your program.

The VB2X-4TCDOTAO expander is now installed. The thermocouples are configured as Type K by default and real variables TC1-TC4 are automatically created and represent the temperature of each thermocouple input channel (1-4) in degrees C. Real variables TC1_CJ - TC4_CJ are automatically created and represent the cold-junction temperature of each channel. The VB2X-4TCDOTAO

Getting to Know the VB2X-4TCDOTAO

supports thermocouple types B, E, J, K, N, R, S and T. To use any of the other thermcouple types, each channel must be configured in the **Project Settings**. Refer to the Thermcouple Input section of this manual for information on configuring the thermocouple input types.

The four output boolean variables EXP_OT0 - EXP_OT3 are automatically created. They represent the four digital outputs.

The integer variables AO1, AO2, AO3, AO4 are automatically created and represent the analog output channels 1-4 control. A boolean variable AO_SHDN is automatically created that enables / disables the analog outputs.

The VB2X-4TCDOTAO is an expander for the VB-2XXX controller. The VB2X-4TCDOTAO provides 4 Thermocouple inputs, 4 Digital Sourcing Outputs and 4 Analog Outputs (configurable 0-10VDC or 4-20mADC). See Figure 1-5.

Model #	Description
VB2X-4TCDOTAO:	VB2X-4TCDOTAO expander with 4 Configurable Thermocouples Inputs, 4 Sourcing Digital Outputs and 4 Configurable Analog Outputs.

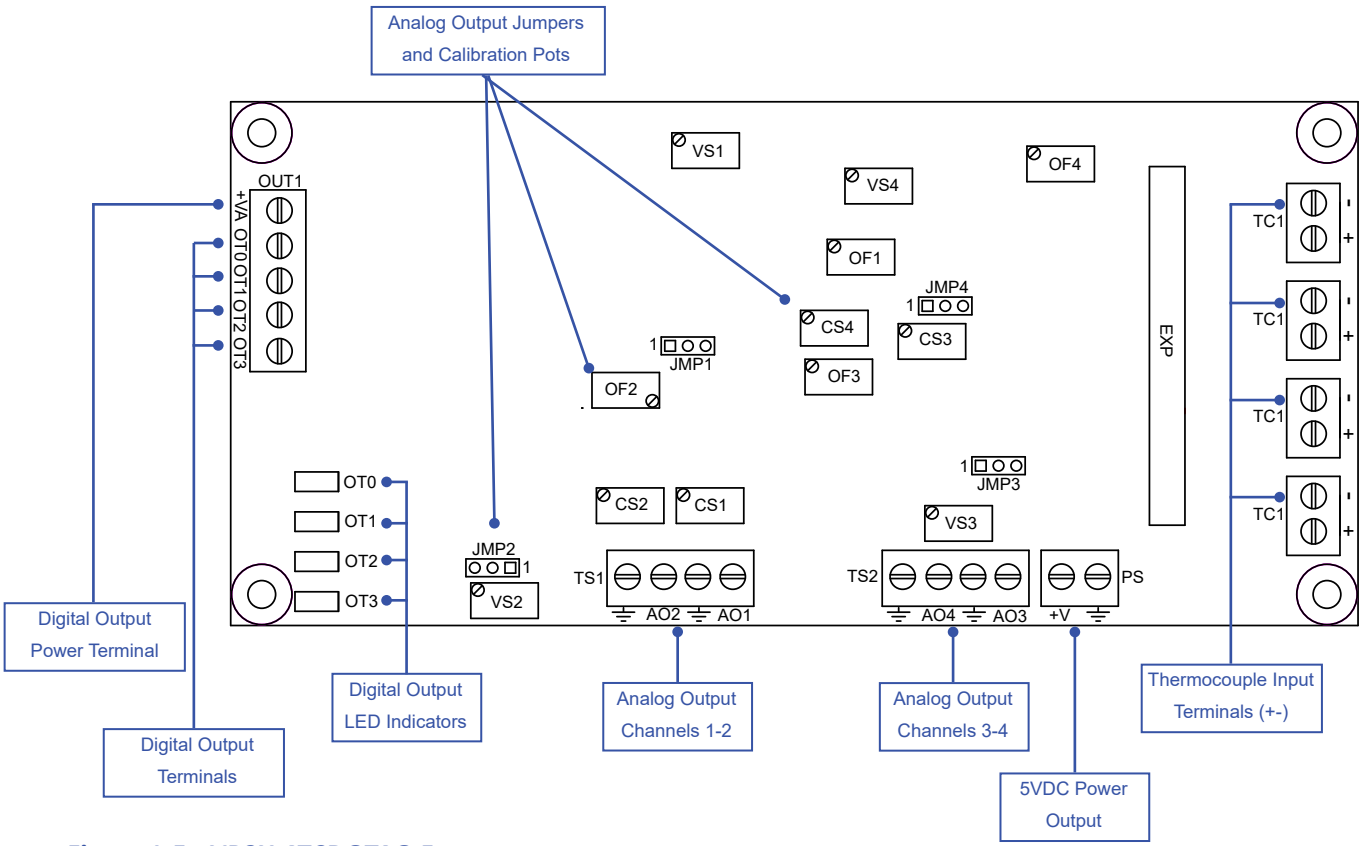

Figure 1-5 - VB2X-4TCDOTAO Features

VB2X-4TCDOTAO Features

This section explains the VB2X-4TCDOTAO Expander hardware features, options and information regarding EZ LADDER Toolkit for basic operation.

Thermocouple Inputs

The VB2X-4TCDOTAO provides 4 configurable type thermocouple inputs. By default, the thermocouple inputs are configured as Type K. They can be re-configured in the **Project Settings** individually to types B, E, J, K, N, R, S and T.

Configuring Thermocouple Types

By default, the thermocouple inputs are configured as Type K. They can be re-configured in the **Project Settings** to types B, E, J, K, N, R, S and T. Each channel is individually configured per type with some additional optional settings.

To configure a channel as a different thermocouple type:

1. In EZ LADDER, from the File Menu at the top, click **PROJECT** then **SETTINGS**. This will open the Project Settings Window. Select **VB-2000** as the target from the choices. Refer to Figure 2-1

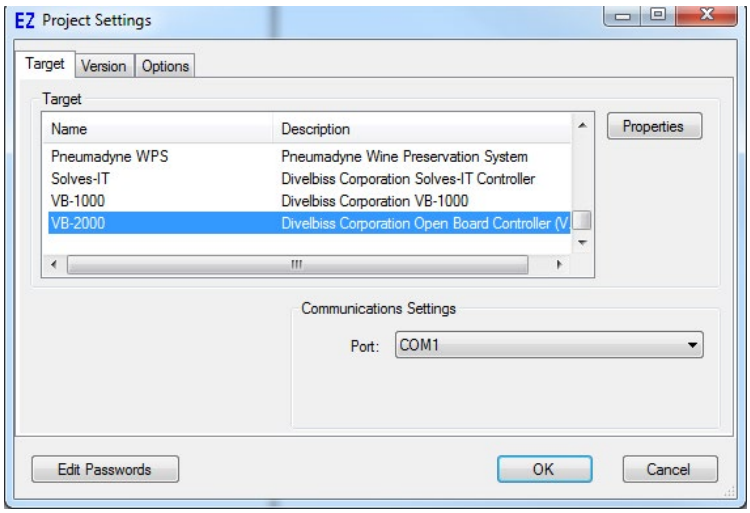

Figure 2-1 - Project Settings Window

2. Click the **PROPERTIES** button to the right side of the window. The VB-2000 Properties Window will open. Make sure the proper model is selected in the drop-down menu. If any expansion board was installed previously, it would be listed in the **Expansion Pane**.

3. Verify the VB2X-4TCDOTAO expansion board is installed.. Refer to Figure 2-2.

4. In the ***Devices Pane***, click the **MAX31856** under the SPI heading. Refer to Figure 2-2.

5. Click the **PROPERTIES** button to the right side of the ***Devices Pane***. The MAX31856 Properties window will open.

6. Each of the four channels are listed (TC1-TC4 variables). Refer to Figure 2-3. To change the Thermocouple type, select one of the channels and click the **PROPERTIES** button to the right in the MAX31856 window.

7. A second MAX31856 Properties window (specific to the channel) will open. Refer to Figure 2-4. the variable names can be changed if desired. Using the drop-down menu, select the type of thermocouple that will be connected to the input.

   Additional optional items are may also be configured (Averagin mode and Noise Filter Rejection). These may be adjusted as needed based on the application.

8. Click **OK** to save the channels setting (close the channel properties window). Click **OK** to Close the MAX31856 properties window. Click **OK** to close the VB-2000 properties window. Click **OK** to Save and close the Project Settings including all changes.

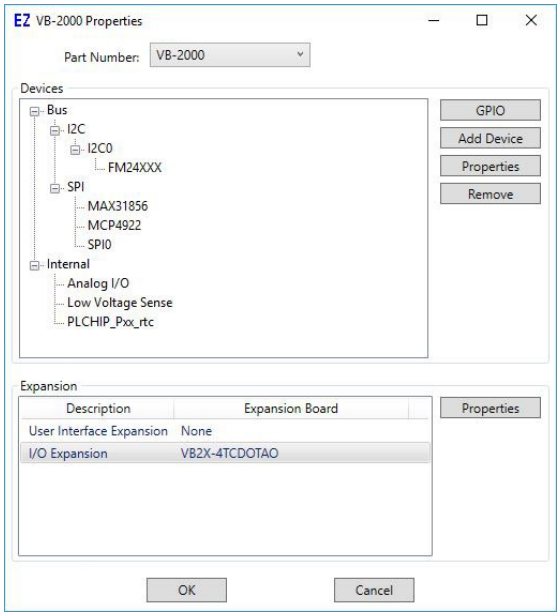

Figure 2-2 - VB-2000 Properties Window

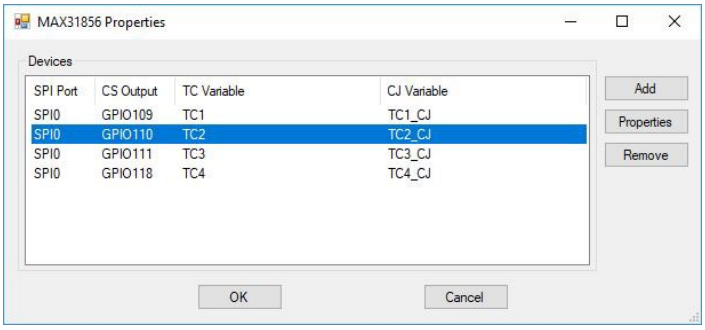

Figure 2-3 - MAX31856 Properties Window

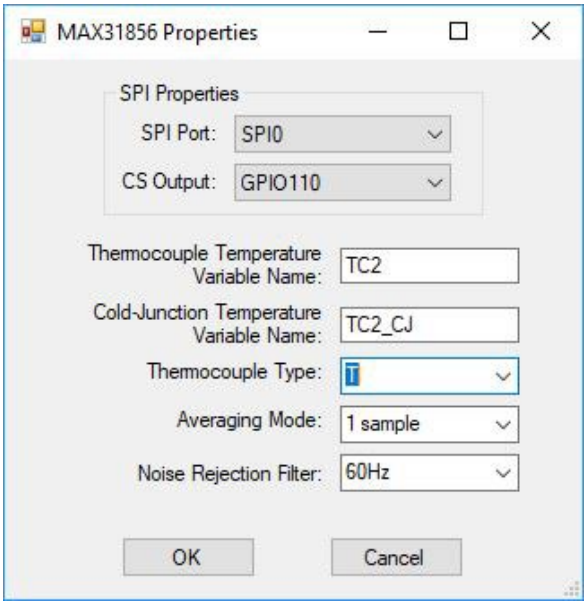

Figure 2-4 - MAX31856 Channel Properties

With the channel(s) configured, they may be used as the appropriate type thermocouple. Any time a thermocouple type is changed in the Project Settings, the program must be recompiled and downloaded to the VB-2XXX target.

Each thermcouple input is represented in the EZ LADDER Toolkit ladder diagram using (Real) variables labeled TC1 - TC4. These variables were created automatically when the VB2X-4TCDOTAO expander was configured as the expansion option for the VB-2XXX target. Variables TC1_CJ - TC4_CJ were created automatically and represent the cold-junction reading for each of the channels.

Each variable (TC1- TC4) will represent the actual temperature read by the connected thermocouple in degrees Celsius. If you wish to have temperatures in degrees Fahrenheit, you must convert the values using mathematical function blocks in your ladder diagram program. Each thermocouple channel internally has all the required cold-junction compensation and linearization required.

Thermocouple Input Connections

For each of the thermocouple inputs (TC1-TC4), a + and - terminal are provided. Refer to Figure 1.5 for locations of the thermocouple input terminals and their polarity. Figure 2-5 illustrates a typical thermocouple connection.

When connecting thermocouples, connect the thermocouple wire directly to the terminals provided. When mounted in an enclosure, ensure that only thermocouple wire of the appropriate type is used for the connections between the VB2X-4TCDOTAO thermocouple terminals and the actual enclosure entry. Failure to use the proper thermocouple wire will result in incorrect temperature readings.

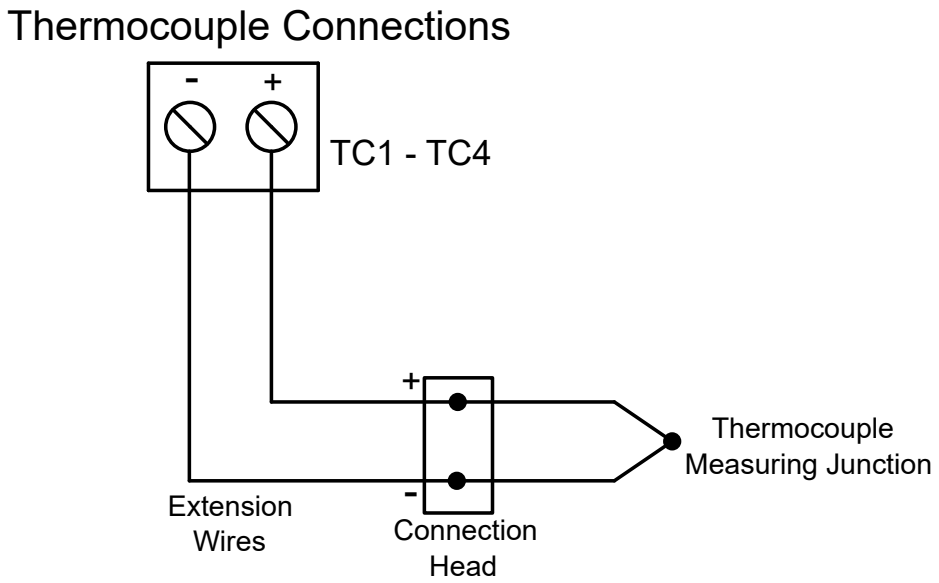

Figure 2-5 - Typical Thermocouple Input Connection

The operating temperature range of the expander may vary based on model number. The VB-2XXX is rated for -40°C to +80°C, but some expanders may not operate under this full range. The controller and expander should only be installed where the temperature range of the narrowest window between the controller and the expander is sufficient.

Divelbiss Corporation • 9778 Mt. Gilead Road • Fredericktown, Ohio 43019 • 1-800-245-2327 • www.divelbiss.com

Digital Outputs

The VB2X-4TCDOTAO includes 4 on-board digital outputs. They are identified in the EZ LADDER Toolkit and this manual as EXP_OT0 - EXP_OT3 (on the expander as OT0 - OT3) and these variables are automatically created when the VB2X-4TCDOTAO is selected as the VB-2XXX Expansion. These outputs are sourcing, therefore an energized output will source an output voltage equal to the connected input voltage on the +VA terminal of the expander. The +VA Power connected must have the same ground as the VB-2XXX Controller. Refer to Figure 2-6 for typical output connections.

An external power connection and source is required to supply power for the outputs. Power is supplied by the +VA terminal using the 18 AWG wire or larger. The +VA terminal and expander outputs allow for expander output loads to be controlled at different voltages from the controller I/O. The expander outputs will operate at any voltage from 8-32VDC. This power must use the same ground as the VB-2XXX controller.

The Expander outputs and controller outputs may be connected to different voltages, but the power supplies connected must have the same common (ground). Failure to use the same common for the expander outputs, controller outputs and controller power may cause unwanted operation and may cause damage to the VB-2XXX.

Each output can drive a load up to maximum current rating listed in the specifications section (resistive) and includes an automatic over-current shutdown safety. In the event an over current condition exists, the output will shut down. This shut down condition is reset when the output is turned off (set to false) in the ladder diagram.

Each output requires a minimum load to operate correctly. Depending upon the device connected to an output, a minimum load resistor may be required. If the output is ON or true regardless of the ladder diagram program, connect a 470Ω to 1KΩ load from the output to input power common.

To control a digital output in a ladder diagram, place and connect the appropriate coil for your needs. The DIRECT COIL and INVERTED COIL functions are used to control digital outputs in the ladder diagram. When placing the coil, verify you select the correct output address (EXP_OT0 - EXP_OT3) from the provided drop-down menu.

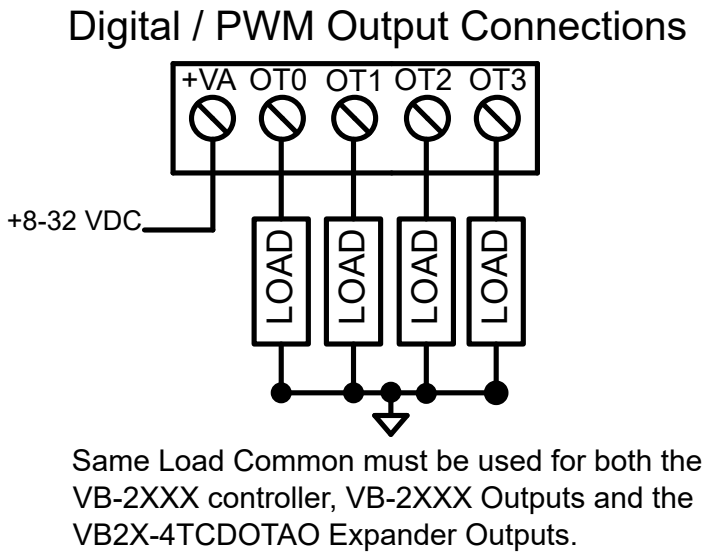

Figure 2-6 - Typical Digital / PWM Output Connections

Each expander output will may be operated as a digital on/off output or as a pulse width modulated (PWM) output. To operate one or more digital outputs as PWM output, it must must be configured in the EZ LADDER Toolkit Project Settings.

Divelbiss Corporation • 9778 Mt. Gilead Road • Fredericktown, Ohio 43019 • 1-800-245-2327 • www.divelbiss.com

PWM Outputs

The VB2X-4TCDOTAO's 4 digital outputs may also be used as Pulse Width Modulation (PWM) outputs instead of digital (on/off) outputs. The outputs whether used as digital on/off outputs or PWM outputs connect to loads the same and will only operate at the specifications listed in the Specifications section of this manual. Refer to Figure 2-6 for connections.

By default, the PWM functionality is not enabled (as it is enabled for digital on/off output functionality). Each output may only be used as either a digital output (on/off) or PWM. Outputs to be used as PWM channels must be configured in EZ LADDER Toolkit using the Project Settings Menu.

The following are the PWM channel assignments for the digital output channels OT0 - OT3 (as listed on the expander in silkscreen).

VB2X-4TCDOTAO Terminal Labeling	PWM Channel	Digital Output Channel / EZ LADDER Variable
OT0	PWM4	EXP_OT0
OT1	PWM5	EXP_OT1
OT2	PWM10	EXP_OT2
OT3	PWM11	EXP_OT3

It is assumed that you are familiar with the VB-2XXX before installing PWM. Please refer to the VB-2XXX User Manual for details regarding the VB-2XXX. Refer to the P-Series EZ LADDER Toolkit Manual for more details on configuring PWM and other options in EZ LADDER Toolkit.

1. In EZ LADDER, from the File Menu at the top, click **PROJECT** then **SETTINGS**. This will open the Project Settings Window. Select **VB-2000** as the target from the choices. Refer to Figure 2-7.

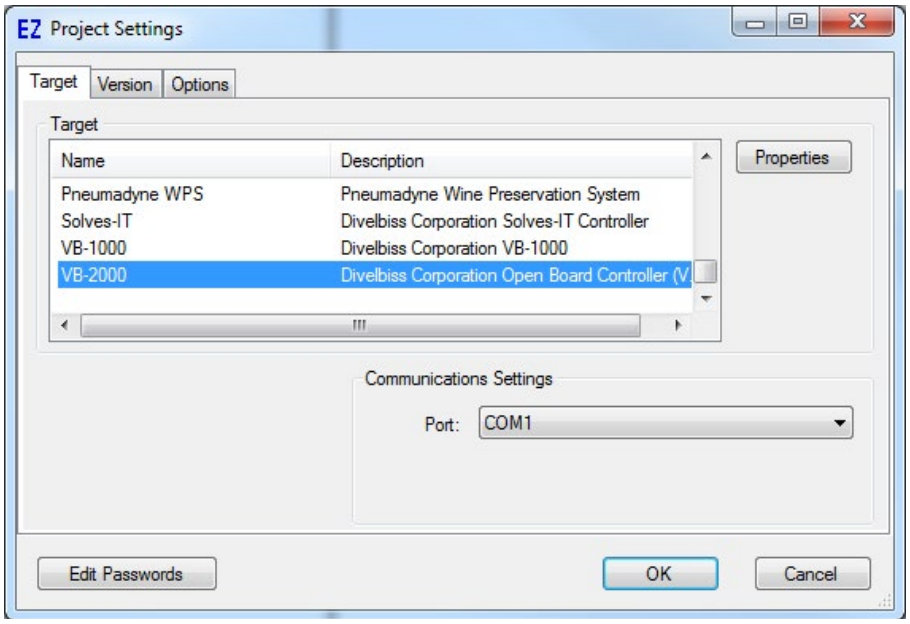

Figure 2-7 - Project Settings Window

2. Click the **PROPERTIES** button to the right side of the window. The VB-2000 Properties Window will open. Make sure the proper model is selected in the drop-down menu. The VB2X-4TCDOTAO should already be installed prior to configuring the PWM channels.

3. If PWM is listed under the ***Internal*** heading, then PWM has been installed (for outputs on the VB-2XXX controller). Only the VB2X-4TCDOTAO PWM channels need to be configured. If PWM is listed under ***Internal***, highlight (select) it and click **PROPERTIES**, othewise, click the **ADD DEVICE** button. Refer to Figure 2-8.

4. The PWM Properties window will open. Refer to Figure 2-9. The channels listed were previously configured. To add additional channels, click the **ADD** button. The Add PWM Dialog will open. Refer to Figure 2-10.

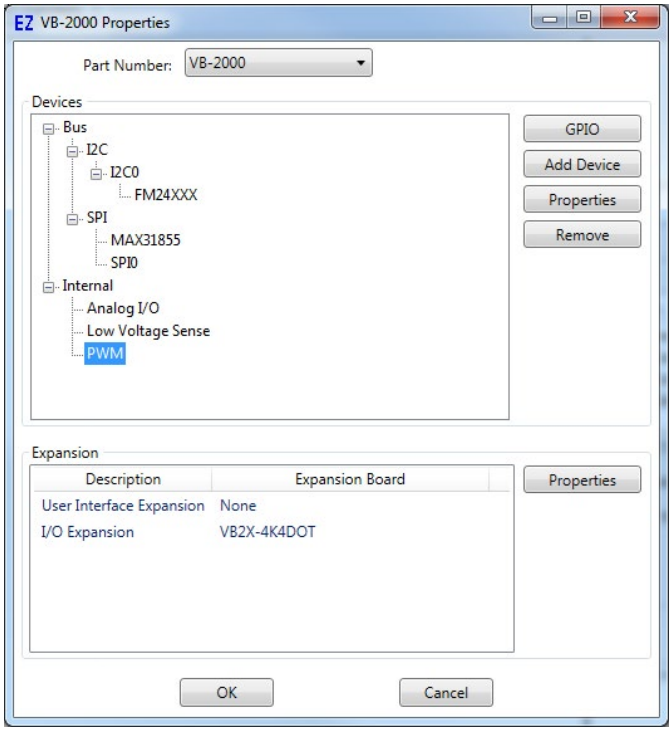

Figure 2-8 - VB-2XXX Properties

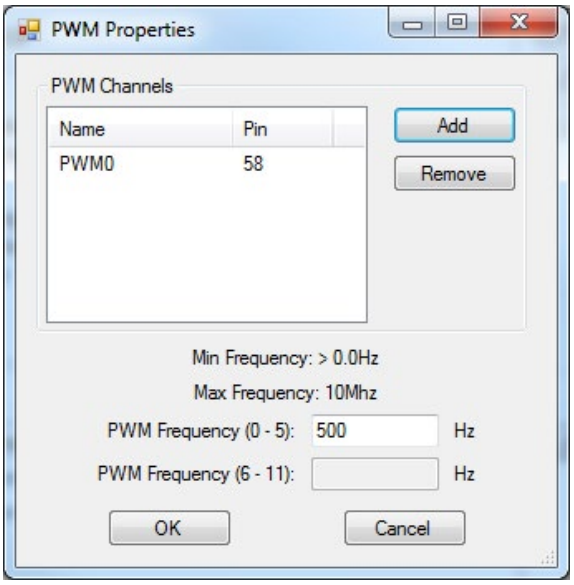

Figure 2-9 - PWM Properties

5. Click to highlight the channels need to add. Refer to the list of PWM channels supported on the VB2X-4TCDOTAO listed earlier in this section. Holding the CTRL key while clicking on PWM channels will allow multiple selections. Click **OK** to accept the selected PWM channels.

6. Enter the base PWM frequency for the channel groups as needed (channels 0-5 use one frequency while channels 6-11 use another frequency setting. PWM channels in each group are based on the frequency for each group. The frequencies may be the same, but the frequency must be entered in both boxes. Refer to Figure 2-9.

7. Click **OK** to close the PWM Properties window. Click **OK** to close the *VB-2000 Properties* window. Click **OK** to close the Project Settings window.

8. Save your ladder diagram using the menu **FILE** and **SAVE** or **SAVE AS** to save the current settings in your program.

The VB2X-4TCDOTAO PWM channel(s) are now installed. The channels may be used in the ladder diagram by the PWM and PWM_FREQ function blocks.

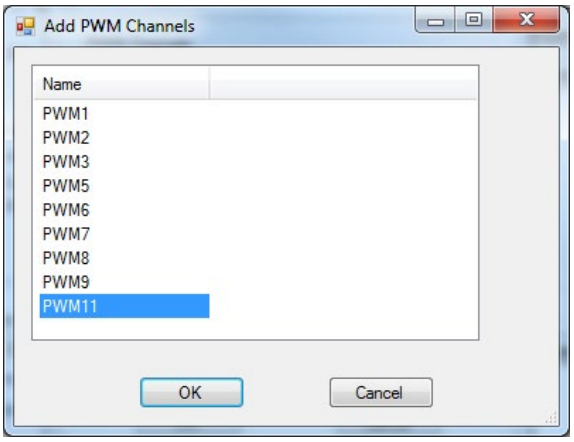

Figure 2-10 - Add PWM Channels

VB2X-4TCDOTAO Analog Outputs

The VB2X-4TCDOTAO has four configurable analog outputs. Each channel is 12-bit resolution and can be individually configured as 0-10VDC sourcing or 4-20mA sourcing. The analog outputs labed AO1-AO4 are controlled in the ladder diagram by variables **AO1 - AO4**. These variables are automatically created when the VB2X-4TCDOTAO expander is configured in the program's Project Settings. Ground terminals are provided for each analog output channel.

Analog Output Connections

Refer to Figure 1-5 for the locations of the analog output terminal blocks and connections. Figure 2-11 is a diagram showing typical connections for analog output channels.

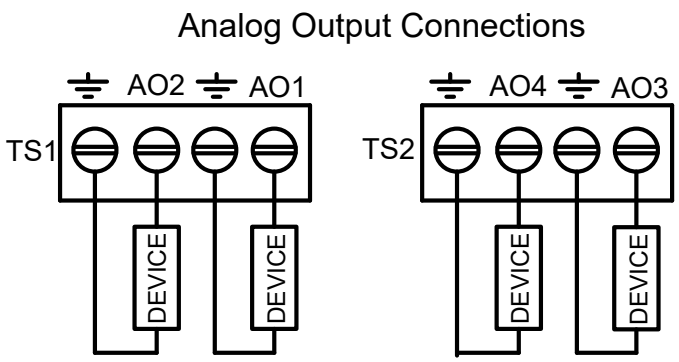

Figure 2-11- Analog Output Connections

The analog outputs are designed to drive high impedance loads. Damage may result attempting to non-high impedance loads with the analog outputs.

Analog Output Configurations

By default, the analog outputs are shipped from the factory configured for 0-10VDC and both ranges (0-10VDC and 4-20mA) are factory calibrated. The channel configuration (0-10VDC or 4-20mA) is selected by on-board jumpers and shunts (JMP1-JMP4). Refer to Figure 1-5 for the locations of the jumpers.

In addition to the location of the jumpers (JMP1-JMP4), Figure 1-5 also identifies PIN 1 (identified by a '1') next to the end of the jumper block. The center PIN is always PIN 2. Setting the shunts as shown, configures the analog output as shown.

JMP1	Pins 1-2 : AOT1 set for 0-10VDC	Pins 2-3 : AOT1 set for 4-20mA
JMP2	Pins 1-2 : AOT2 set for 0-10VDC	Pins 2-3 : AOT2 set for 4-20mA
JMP3	Pins 1-2 : AOT3 set for 0-10VDC	Pins 2-3 : AOT3 set for 4-20mA
JMP4	Pins 1-2 : AOT4 set for 0-10VDC	Pins 2-3 : AOT4 set for 4-20mA

Analog Output Control

The analog outputs are controlled in the ladder diagram by variables. Five variables are automatically created when the VB2X-4TCDOTAO expander is installed. AO1 - AO4 are the actual analog output control variables. These integer variables operate from 0 to 4095; where 0 is the minimum value of the output scale (0VDC or 4mADC) and 4095 is the maximum value of the output scale (10VDC or 20mADC). As these values are changed in the program, the analog output will respond accordingly. provided they are enabled.

The 5th variable is the AO_SHDN variable. This variable is the enable output (boolean) for the analog outputs. When this variable is false, the analog outputs are disabled and output near the minimum range (approximately 1VDC or 5mADC). When enabled, the analog outputs will output the voltage / current based the the AO1-AO4 variable values.

Divelbiss Corporation • 9778 Mt. Gilead Road • Fredericktown, Ohio 43019 • 1-800-245-2327 • www.divelbiss.com

Analog Output Calibration - Voltage 0-10V Configuration

The analog outputs are factory calibrated, but should the need for re-calibration occur, follow the following procedure. You will need a digital voltmeter and a small flat screwdriver or potentiomter adjustment tool.

Each analog output has one potentiometer for calibrating the *span* of the analog output. These potetiometers are labeled VS1 - VS4 for AO1 - AO4 repectively. Refer to Figure 1-5 for the locations of the potentiometers VS1 - VS4.

This calibration procedure is for Voltage output only and the configuration jumper(s) must be set for voltage prior to calibration. For Current (4-20mA output) Calibration, refer to the ***Analog Output Calibration - Current 4-20mA Configuration*** section.

To Calibrate the Voltage Output of a Channel :

1. Connect the digital voltmeter positive (+) to the AOx (where x represents the channel number) terminal block and the negative (-) to the provided ground terminal of the AOx output terminal block. Refer to Figure 2-11, replaceing 'DEVICE' with the digital voltmeter.

2. Run a program in EZ LADDER Toolkit (in the Monitor mode) that allows you to double-click and change the values of the **AO_SHDN** and **AOx** variable. For information on writing programs and using EZ LADDER Toolkit, refer to the P-Series EZ LADDER Toolkit Manual.

3. Double-click the **AO_SHDN** variable and set it to '1' then close then click **OK**. This enables the analog outputs on the expander.

4. Double-click the **AOx** (where x represents the channel you are calibrating) variable. Set the value to '4095' and click **OK**. This sets the analog output for full scale (10V).

5. Using the screwdriver or potentiometer adjustment tool, adjust the VSx potentiometer until the voltmeter reads 10.00VDC. Calibration is complete for the channel. You can verify by setting the AOx variable to '2048' which should be 5.0VDC (mid-scale).

6. Repeat these steps for each channel that requires calibration. The calibration potentiometers should be sealed after calibration.

Analog Output Calibration - Current 4-20mA Configuration

The analog outputs are factory calibrated, but should the need for re-calibration occur, follow the following procedure. You will need a digital voltmeter capable of reading current (<100mADC) and a small flat screwdriver or potentiomter adjustment tool.

Each analog output has one potentiometer for calibrating the *span* of the analog output. These potetiometers are labeled CS1 - CS4 for AO1 - AO4 repectively. Each output also has one potentiometer for calibrating the 4mA offset of the analog output. These potiometers are labeled OF1 - OF4 for AO1 - AO4 respectively. Refer to Figure 1-5 for the locations of the potentiometers CS1 - CS4 and OF1-OF4.

This calibration procedure is for 4-20mA Current output only and the configuration jumper(s) must be set for current prior to calibration. For Voltage (0-10VDC output) Calibration, refer to the ***Analog Output Calibration - Voltage 0-10V Configuration*** section.

To Calibrate the Current Output of a Channel :

1. Connect the digital voltmeter (set for mA current) positive (+) to the AOx (where x represents the channel number) terminal block and the negative (-) to the provided ground terminal of the AOx output terminal block. Refer to Figure 2-11, replaceing 'DEVICE' with the digital voltmeter.

2. Run a program in EZ LADDER Toolkit (in the Monitor mode) that allows you to double-click and change the values of the **AO_SHDN** and **AOx** variable. For information on writing programs and using EZ LADDER Toolkit, refer to the P-Series EZ LADDER Toolkit Manual.

3. Double-click the **AO_SHDN** variable and set it to '1' then close then click **OK**. This enables the analog outputs on the expander.

4. Double-click the **AOx** (where x represents the channel you are calibrating) variable. Set the value to '0' and click **OK**. This sets the analog output for min scale (4mA).

5. Using the screwdriver or potentiometer adjustment tool, adjust the OFx (where x represents the channel you are calibrating) potentiometer until the voltmeter reads 4.00 mADC.

6. Double-click the **AOx** (where x represents the channel you are calibrating) variable. Set the value to '4095' and click **OK**. This sets the analog output for full scale (20mA).

7. Using the screwdriver or potentiometer adjustment tool, adjust the CSx (where x represents the channel you are calibrating) potentiometer until the voltmeter reads 20.00 mADC.

When calibrating the current mode of each channel, the offset calibration (OF) and span calibration (CS) will affect each other. It will be necessary to repeat the maximum and minimum calibration steps until the actual final calibration is achieved.

8. Repeat steps 4 - 7 as needed to achieve the final calibration (4-20mA). This can take multiple cycles of the steps depending upon how far out of calibration the output is.

9. Once calibration is achieved on the channel, it can be verified by setting the AOx variable to '2048' which should be 12.0 mADC (mid-scale).

6. Repeat these steps for each channel that requires calibration. The calibration potentiometers should be sealed after calibration.

VB2X-4TCDOTAO 5VDC Sensor Output Supply

The VB2X-4TCDOTAO provides a 5VDC output that may be used to supply power to analog devices such as sensors. This 5VDC output has limited current to 100mA total.

The 5VDC power supply is a logic supply. Care should be taken when wiring to promote electrical noise immunity (shield cable, proper cable routing etc.). This supply should not be used for devices that will induce electrical noise back to the expander and controller. Overloading the supply or inducing electrical noise into the supply may damage the expander, the controller or result in unwanted operation.

The 5VDC power is located next to the analog outputs (AO3/AO4). Refer to Figure 1-5 (PS connector) for the location.

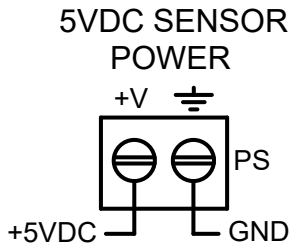

Figure 2-12- 5VDC Sensor Power

VB2X-4TCDOTAO Specifications

Thermocouple Inputs:	Qty: 4 Types: B, E, J, K, N, R, S and T. Automatic Linearization
Digital I/O:	4 Digital Outputs on-board Outputs rated 1A Max per output, Maximim 4A Total for all outputs combined. Over-current protected. LED Indicators Sourcing as Group of 4 Outputs, External Power Source Required on +VA, 8-32VDC
Analog Outputs:	4 Individually Configurable 0-10VDC or 4-20mADC (Jumper Select) 12-bit Resolution Potentiometer Calibration Drives High Impedance Loads only
5V Sensor Power:	5VDC Power Supply for Sensors 200mADC Maximum
Operating Temp:	-40°C to 80°C
Dimensions:	2.9” Wide x 6.4” Length x .1.35” Tall.
Mounting:	Installs on VB-2XXX Controller, Stack Mount using #6 spacers and screws
Type:	Open Board
Storage Temperature:	-40 to 85°C

Divelbiss Corporation • 9778 Mt. Gilead Road • Fredericktown, Ohio 43019 • 1-800-245-2327 • www.divelbiss.com